RIB Building Automation

Functional Devices, Inc.
101 Commerce Drive
Sharpsville, IN 46068

Confidence & Peace of Mind in Every Box™
www.functionaldevices.com
sales@functionaldevices.com

Office: (765) 883-5538
Fax: (765) 883-7505
Toll Free: (800) 888-5538

TRANSFORMER

TR40VA003

Transformer 40 VA, 24 to 24 Vac, Foot and Single Threaded Hub Mount

c UL us LISTED
Class 2

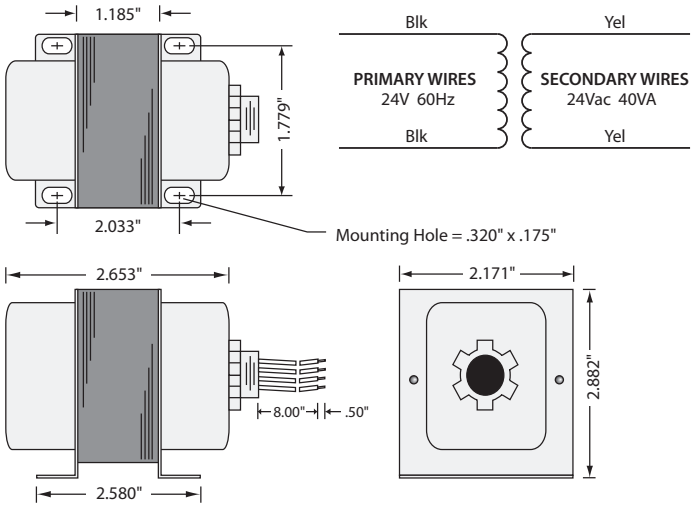

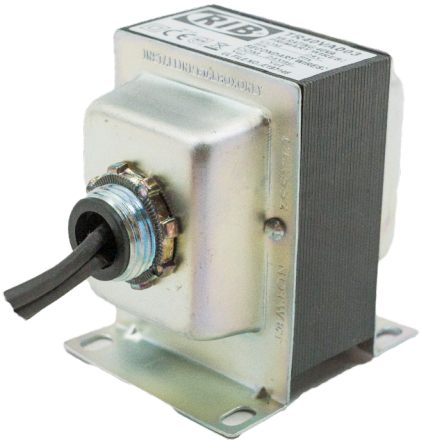

SPECIFICATIONS

VA Rating: 40
Frequency: 50/60 Hz
Mounting: Foot & Single Threaded Hub
Over Current Protection: Inherently Limited
Operating Temperature: -30 to 140° F

Dimensions: 2.653” x 2.171” x 2.882” (w/ .500” NPT Hub)
Wire Length: 8.0” Typical w/ .5” Strip
MTBF: 100,000 Hours @ 77° F
Construction: Split-Bobbin
Approvals: Class 2 UL5085-3 Listed, C-UL, CE, RoHS